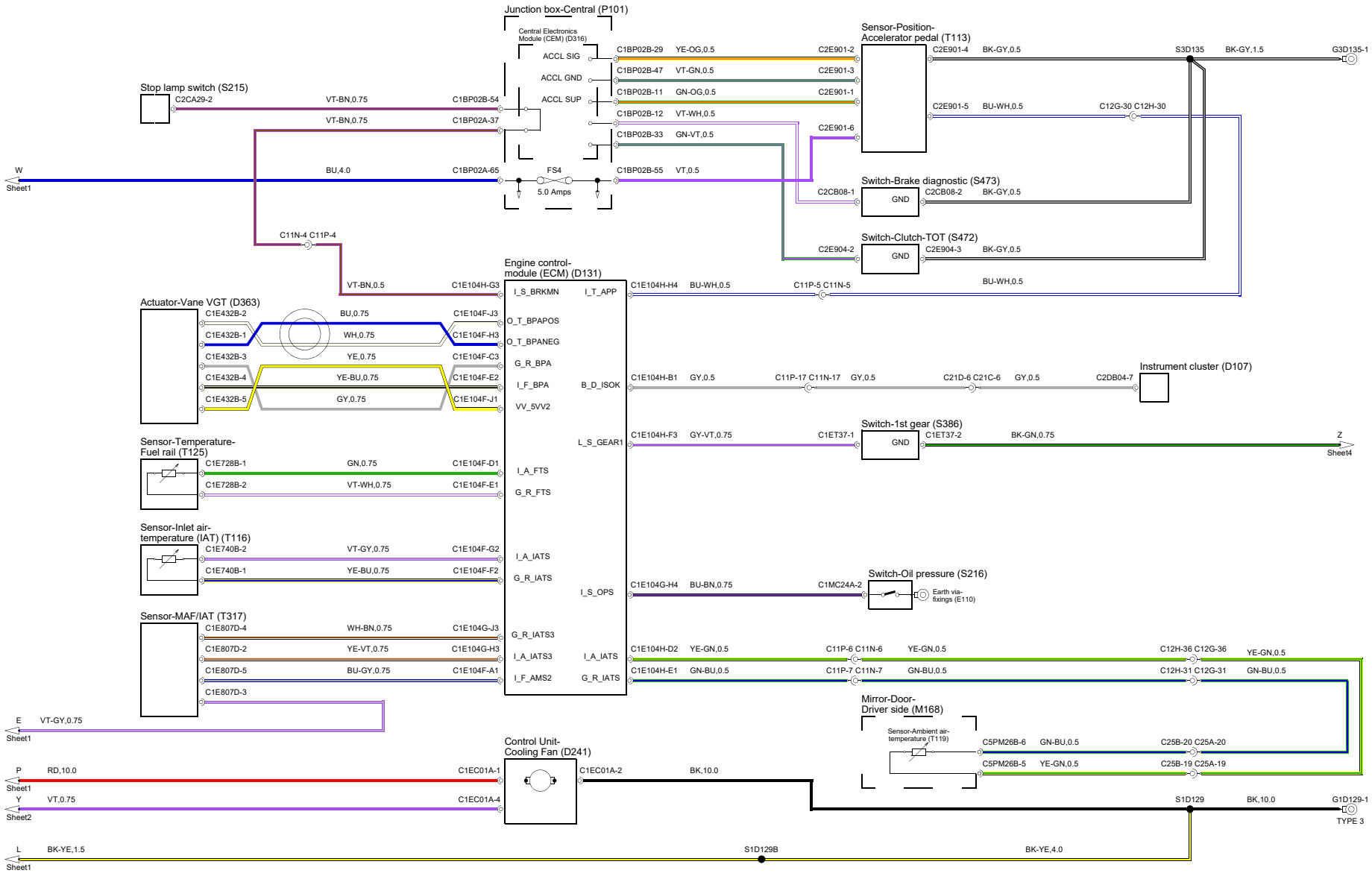
Junction box-Central (P101)
Central Electronics Module (CEM) (D316)
ACCL SIG
ACCL GND
ACCL SUP
FS4
5.0 Amps
Sensor-Position-Accelerator pedal (T113)
Stop lamp switch (S215)
C2CA29-2
VT-BN,0.75
C1BP02B-54
C1BP02A-37
C1BP02B-29 YE-OG,0.5 C2E901-2
C1BP02B-47 VT-GN,0.5 C2E901-3
C1BP02B-11 GN-OG,0.5 C2E901-1
C1BP02B-12 VT-WH,0.5
C1BP02B-33 GN-VT,0.5
C2E901-6
C2E901-4 BK-GY,0.5 S3D135 BK-GY,1.5 G3D135-1
C2E901-5 BU-WH,0.5 C12G-30 C12H-30
W
Sheet1
BU,4.0
C1BP02A-65
C1BP02B-55 VT,0.5
Switch-Brake diagnostic (S473)
C2CB08-1
GND
C2CB08-2 BK-GY,0.5
Switch-Clutch-TOT (S472)
C2E904-2
C2E904-3 BK-GY,0.5
C11N-4 C11P-4
Engine control-module (ECM) (D131)
VT-BN,0.5
C1E104H-G3
I_S_BRKMN
I_T_APP
C1E104H-H4 BU-WH,0.5 C11P-5 C11N-5
BU-WH,0.5
Actuator-Vane VGT (D363)
C1E432B-2
C1E432B-1
C1E432B-3
C1E432B-4
C1E432B-5
BU,0.75
WH,0.75
YE,0.75
YE-BU,0.75
GY,0.75
C1E104F-J3
C1E104F-H3
C1E104F-C3
C1E104F-E2
C1E104F-J1
O_T_BPAPOS
O_T_BPANEG
G_R_BPA
I_F_BPA
VV_5VV2
B_D_ISOK
C1E104H-B1 GY,0.5 C11P-17 C11N-17 GY,0.5 C21D-6 C21C-6 GY,0.5 C2DB04-7
Instrument cluster (D107)
Switch-1st gear (S386)
L_S_GEAR1
C1E104H-F3 GY-VT,0.75 C1ET37-1
GND
C1ET37-2 BK-GN,0.75
Z
Sheet4
Sensor-Temperature-Fuel rail (T125)
C1E728B-1 GN,0.75 C1E104F-D1
C1E728B-2 VT-WH,0.75 C1E104F-E1
I_A_FTS
G_R_FTS
Sensor-Inlet air-temperature (IAT) (T116)
C1E740B-2 VT-GY,0.75 C1E104F-G2
C1E740B-1 YE-BU,0.75 C1E104F-F2
I_A_IATS
G_R_IATS
I_S_OPS
C1E104G-H4 BU-BN,0.75 C1MC24A-2
Switch-Oil pressure (S216)
Earth via-fixings (E110)
Sensor-MAF/IAT (T317)
C1E807D-4 WH-BN,0.75 C1E104G-J3
C1E807D-2 YE-VT,0.75 C1E104G-H3
C1E807D-5 BU-GY,0.75 C1E104F-A1
C1E807D-3
G_R_IATS3
I_A_IATS3
I_F_AMS2
I_A_IATS
G_R_IATS
C1E104H-D2 YE-GN,0.5 C11P-6 C11N-6 YE-GN,0.5 C12H-36 C12G-36 YE-GN,0.5
C1E104H-E1 GN-BU,0.5 C11P-7 C11N-7 GN-BU,0.5 C12H-31 C12G-31 GN-BU,0.5
E
Sheet1
VT-GY,0.75
Mirror-Door-Driver side (M168)
Sensor-Ambient air-temperature (T119)
C5PM26B-6 GN-BU,0.5 C25B-20 C25A-20
C5PM26B-5 YE-GN,0.5 C25B-19 C25A-19
Control Unit-Cooling Fan (D241)
P
Sheet1
RD,10.0
C1EC01A-1
C1EC01A-2
BK,10.0
Y
Sheet2
VT,0.75
C1EC01A-4
S1D129
BK,10.0
G1D129-1
TYPE 3
L
Sheet1
BK-YE,1.5
S1D129B
BK-YE,4.0