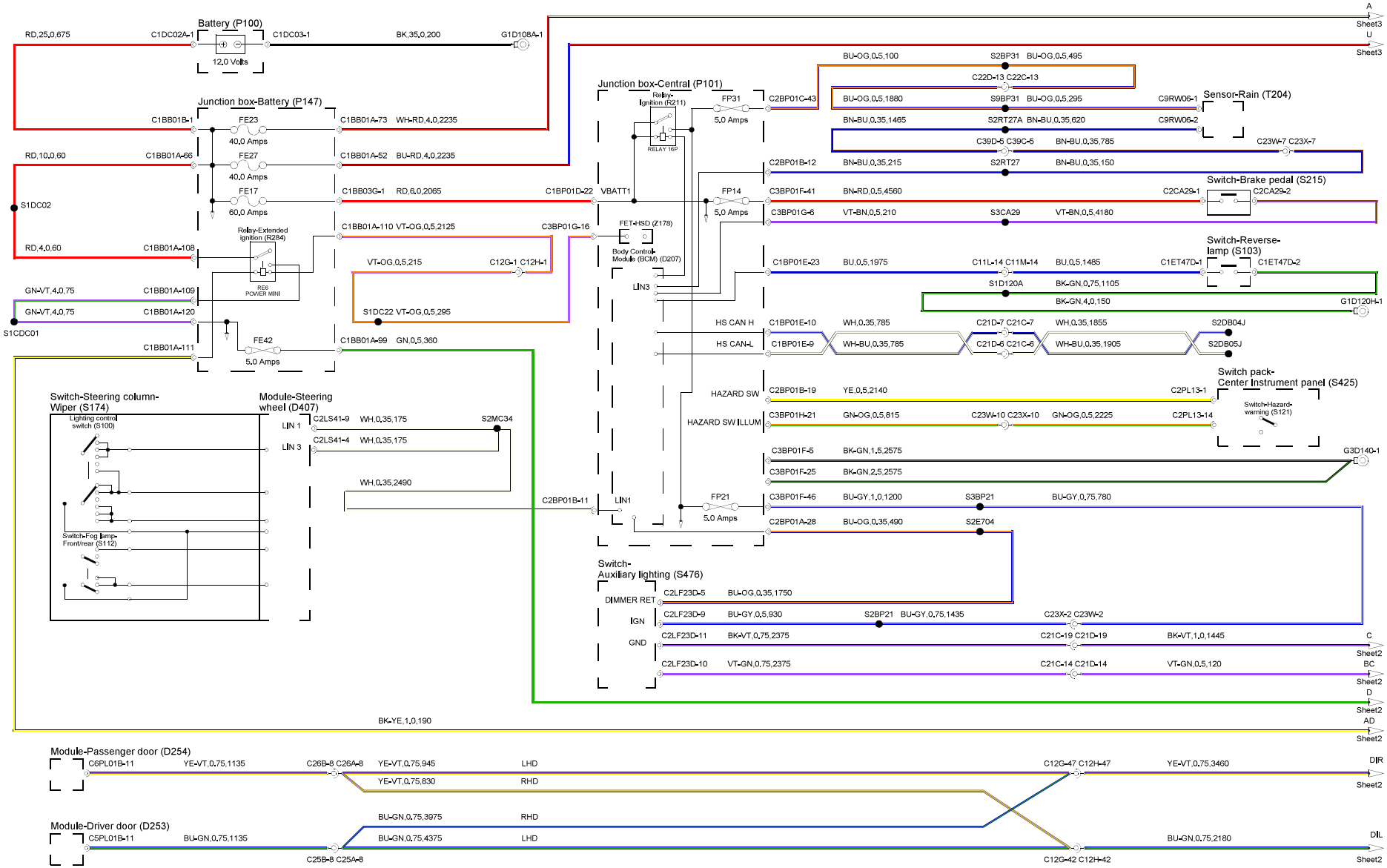
Battery (P100)
12,0 Volts
Junction box-Battery (P147)
Junction box-Central (P101)
Relay-Ignition (R211)
RELAY 16P
Sensor-Rain (T204)
Switch-Brake pedal (S215)
Switch-Reverse-lamp (S103)
Relay-Extended ignition (R284)
RE6 POWER MINI
FET-HSD (Z178)
Body Control-Module (BCM) (D207)
Switch-Steering column-Wiper (S174)
Lighting control switch (S100)
Switch-Fog lamp-Front/rear (S112)
Module-Steering wheel (D407)
Switch pack-Center Instrument panel (S425)
Switch-Hazard-warning (S121)
Switch-Auxiliary lighting (S476)
Module-Passenger door (D254)
Module-Driver door (D253)
HS CAN H
HS CAN-L
HAZARD SW
HAZARD SW ILLUM
DIMMER RET
IGN
GND
LIN 1
LIN 3
LIN1
LIN3
VBATT1
FP31
FP14
FP21
5,0 Amps
5.0 Amps
FE23
FE27
FE17
FE42
40,0 Amps
60,0 Amps
5.0 Amps
RD,25,0,675
RD,10,0,60
RD,4,0,60
GN-VT,4,0,75
S1DC02
S1CDC01
BK,35,0,200
BU-OG,0,5,100
BU-OG,0,5,1880
BN-BU,0,35,1465
BU-RD,4,0,2235
RD,6,0,2065
VT-OG,0,5,2125
VT-OG,0,5,215
VT-OG,0,5,295
GN,0,5,360
BU,0,5,1975
WH,0,35,785
WH-BU,0,35,785
WH,0,35,175
WH,0,35,2490
YE,0,5,2140
GN-OG,0,5,815
BK-GN,1,5,2575
BK-GN,2,5,2575
BU-GY,1,0,1200
BU-OG,0,35,490
BU-OG,0,35,1750
BU-GY,0,5,930
BK-VT,0,75,2375
VT-GN,0,75,2375
BK-YE,1,0,190
YE-VT,0,75,1135
YE-VT,0,75,945
YE-VT,0,75,830
LHD
RHD
BU-GN,0,75,1135
BU-GN,0,75,3975
BU-GN,0,75,4375
BU-GN,0,75,2180
Sheet3
Sheet2

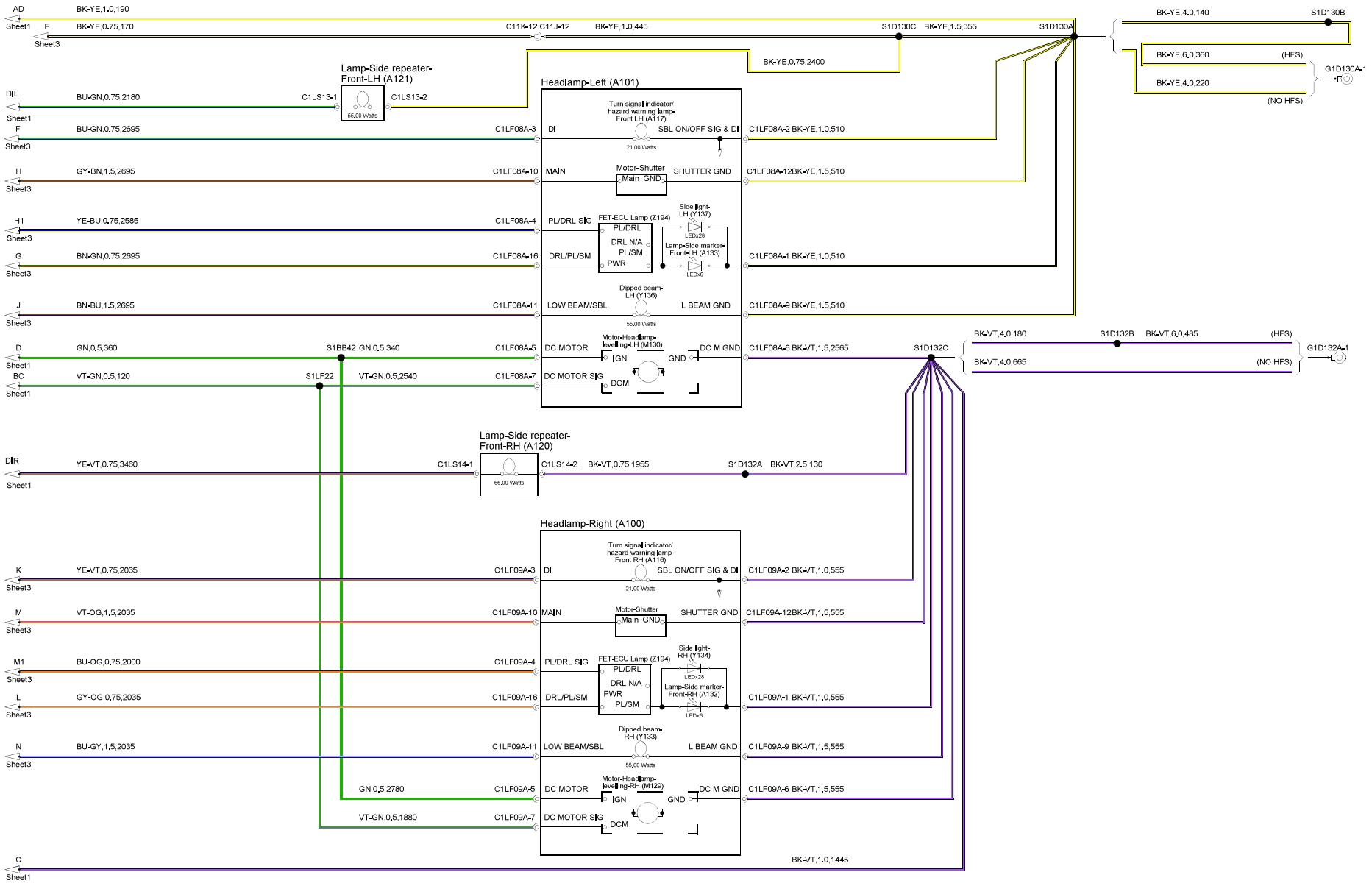
AD
BK-YE,1.0,190
Sheet1
E
BK-YE,0.75,170
Sheet3
C11K-12 C11J-12
BK-YE,1.0,445
S1D130C
BK-YE,1.5,355
S1D130A
BK-YE,4.0,140
S1D130B
BK-YE,6.0,360
(HFS)
BK-YE,4.0,220
(NO HFS)
G1D130A-1
BK-YE,0.75,2400
Lamp-Side repeater-Front-LH (A121)
DIL
BU-GN,0.75,2180
C1LS13-1
C1LS13-2
55,00 Watts
Headlamp-Left (A101)
Turn signal indicator/hazard warning lamp-Front LH (A117)
F
BU-GN,0.75,2695
C1LF08A-3
DI
SBL ON/OFF SIG & DI
21,00 Watts
C1LF08A-2 BK-YE,1.0,510
H
GY-BN,1.5,2695
C1LF08A-10
MAIN
Motor-Shutter
Main GND
SHUTTER GND
C1LF08A-12BK-YE,1.5,510
H1
YE-BU,0.75,2585
C1LF08A-4
PL/DRL SIG
FET-ECU Lamp (Z194)
PL/DRL
DRL N/A
PL/SM
PWR
Side light-LH (Y137)
LEDx28
Lamp-Side marker-Front-LH (A133)
LEDx6
G
BN-GN,0.75,2695
C1LF08A-16
DRL/PL/SM
C1LF08A-1 BK-YE,1.0,510
J
BN-BU,1.5,2695
C1LF08A-11
LOW BEAM/SBL
Dipped beam-LH (Y136)
55,00 Watts
L BEAM GND
C1LF08A-9 BK-YE,1.5,510
D
GN,0.5,360
S1BB42 GN,0.5,340
C1LF08A-5
DC MOTOR
Motor-Headlamp-levelling-LH (M130)
IGN
GND
DC M GND
C1LF08A-6 BK-VT,1.5,2565
S1D132C
BK-VT,4.0,180
S1D132B
BK-VT,6.0,485
(HFS)
BK-VT,4.0,665
(NO HFS)
G1D132A-1
BC
VT-GN,0.5,120
S1LF22
VT-GN,0.5,2540
C1LF08A-7
DC MOTOR SIG
DCM
Lamp-Side repeater-Front-RH (A120)
DIR
YE-VT,0.75,3460
C1LS14-1
C1LS14-2
BK-VT,0.75,1955
S1D132A
BK-VT,2.5,130
Headlamp-Right (A100)
Turn signal indicator/hazard warning lamp-Front RH (A116)
K
YE-VT,0.75,2035
C1LF09A-3
C1LF09A-2 BK-VT,1.0,555
M
VT-OG,1.5,2035
C1LF09A-10
C1LF09A-12BK-VT,1.5,555
M1
BU-OG,0.75,2000
C1LF09A-4
Side light-RH (Y134)
Lamp-Side marker-Front-RH (A132)
L
GY-OG,0.75,2035
C1LF09A-16
C1LF09A-1 BK-VT,1.0,555
N
BU-GY,1.5,2035
C1LF09A-11
Dipped beam-RH (Y133)
C1LF09A-9 BK-VT,1.5,555
GN,0.5,2780
C1LF09A-5
Motor-Headlamp-levelling-RH (M129)
C1LF09A-6 BK-VT,1.5,555
VT-GN,0.5,1880
C1LF09A-7
C
BK-VT,1.0,1445

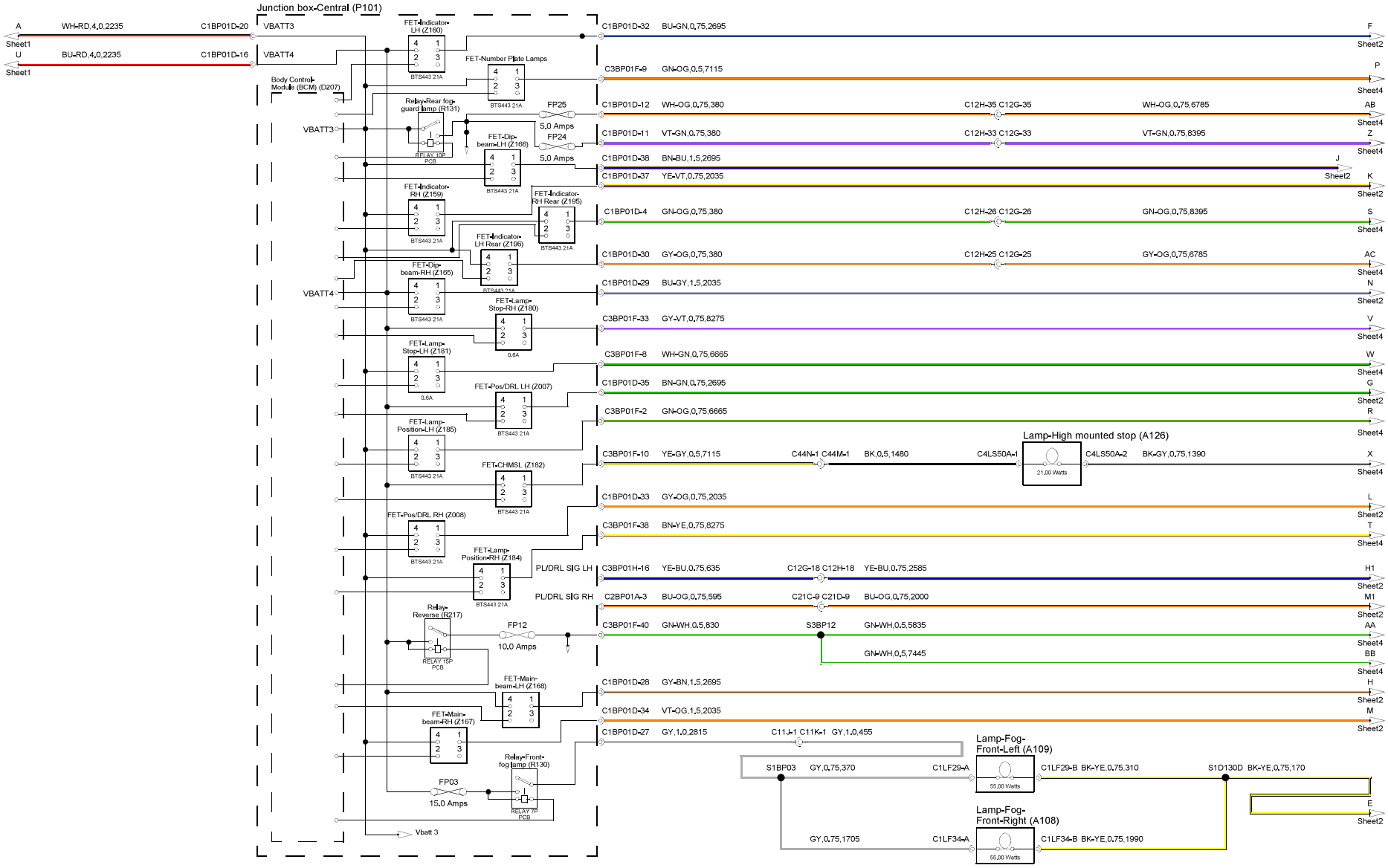
Junction box-Central (P101)
A WH-RD,4.0,2235 C1BP01D-20 VBATT3 Sheet1
U BU-RD,4.0,2235 C1BP01D-16 VBATT4 Sheet1
Body Control-Module (BCM) (D207)
FET-Indicator-LH (Z160)
FET-Number Plate Lamps
Relay-Rear fog-guard lamp (R131)
FP25 5.0 Amps
FP24 5.0 Amps
FET-Dip-beam-LH (Z166)
FET-Indicator-RH (Z159)
FET-Indicator-RH Rear (Z195)
FET-Indicator-LH Rear (Z196)
FET-Dip-beam-RH (Z165)
FET-Lamp-Stop-RH (Z180)
FET-Lamp-Stop-LH (Z181)
FET-Pos/DRL LH (Z007)
FET-Lamp-Position-LH (Z185)
FET-CHMSL (Z182)
FET-Pos/DRL RH (Z008)
FET-Lamp-Position-RH (Z184)
Relay-Reverse (R217)
FP12 10.0 Amps
FET-Main-beam-LH (Z168)
FET-Main-beam-RH (Z167)
Relay-Front-fog lamp (R130)
FP03 15.0 Amps
Vbatt 3
C1BP01D-32 BU-GN,0.75,2695 F Sheet2
C3BP01F-9 GN-OG,0.5,7115 P Sheet4
C1BP01D-12 WH-OG,0.75,380 C12H-35 C12G-35 WH-OG,0.75,6785 AB Sheet4
C1BP01D-11 VT-GN,0.75,380 C12H-33 C12G-33 VT-GN,0.75,8395 Z Sheet4
C1BP01D-38 BN-BU,1.5,2695 J Sheet2
C1BP01D-37 YE-VT,0.75,2035 K Sheet2
C1BP01D-4 GN-OG,0.75,380 C12H-26 C12G-26 GN-OG,0.75,8395 S Sheet4
C1BP01D-30 GY-OG,0.75,380 C12H-25 C12G-25 GY-OG,0.75,6785 AC Sheet4
C1BP01D-29 BU-GY,1.5,2035 N Sheet2
C3BP01F-33 GY-VT,0.75,8275 V Sheet4
C3BP01F-8 WH-GN,0.75,6665 W Sheet4
C1BP01D-35 BN-GN,0.75,2695 G Sheet2
C3BP01F-2 GN-OG,0.75,6665 R Sheet4
Lamp-High mounted stop (A126)
C3BP01F-10 YE-GY,0.5,7115 C44N-1 C44M-1 BK,0.5,1480 C4LS50A-1 C4LS50A-2 BK-GY,0.75,1390 X Sheet4
21.00 Watts
C1BP01D-33 GY-OG,0.75,2035 L Sheet2
C3BP01F-38 BN-YE,0.75,8275 T Sheet4
PL/DRL SIG LH C3BP01H-16 YE-BU,0.75,635 C12G-18 C12H-18 YE-BU,0.75,2585 H1 Sheet2
PL/DRL SIG RH C2BP01A-3 BU-OG,0.75,595 C21C-9 C21D-9 BU-OG,0.75,2000 M1 Sheet2
C3BP01F-40 GN-WH,0.5,830 S3BP12 GN-WH,0.5,5835 AA Sheet4
GN-WH,0.5,7445 BB Sheet4
C1BP01D-28 GY-BN,1.5,2695 H Sheet2
C1BP01D-34 VT-OG,1.5,2035 M Sheet2
C1BP01D-27 GY,1.0,2815 C11J-1 C11K-1 GY,1.0,455
Lamp-Fog-Front-Left (A109)
S1BP03 GY,0.75,370 C1LF29-A C1LF29-B BK-YE,0.75,310 S1D130D BK-YE,0.75,170
55.00 Watts
Lamp-Fog-Front-Right (A108)
GY,0.75,1705 C1LF34-A C1LF34-B BK-YE,0.75,1990
55.00 Watts
E Sheet2

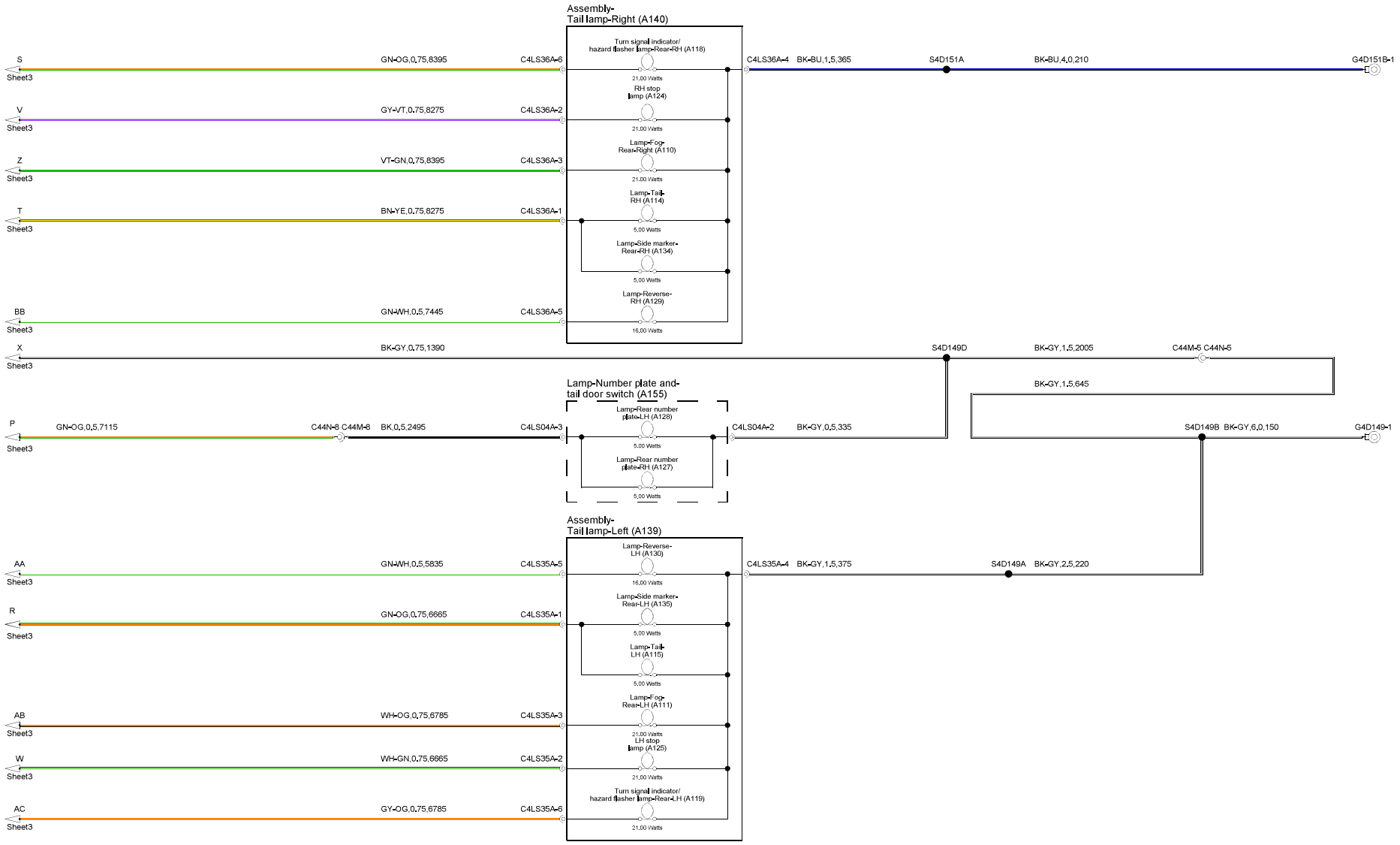
Assembly-
Tail lamp-Right (A140)
Turn signal indicator/
hazard flasher lamp-Rear-RH (A118)
21.00 Watts
RH stop
lamp (A124)
21.00 Watts
Lamp-Fog-
Rear-Right (A110)
21.00 Watts
Lamp-Tail-
RH (A114)
5.00 Watts
Lamp-Side marker-
Rear-RH (A134)
5.00 Watts
Lamp-Reverse-
RH (A129)
16.00 Watts
S
Sheet3
GN-OG,0.75,8395
C4LS36A-6
C4LS36A-4
BK-BU,1.5,365
S4D151A
BK-BU,4.0,210
G4D151B-1
V
Sheet3
GY-VT,0.75,8275
C4LS36A-2
Z
Sheet3
VT-GN,0.75,8395
C4LS36A-3
T
Sheet3
BN-YE,0.75,8275
C4LS36A-1
BB
Sheet3
GN-WH,0.5,7445
C4LS36A-5
X
Sheet3
BK-GY,0.75,1390
S4D149D
BK-GY,1.5,2005
C44M-5 C44N-5
BK-GY,1.5,645
Lamp-Number plate and-
tail door switch (A155)
Lamp-Rear number
plate-LH (A128)
5.00 Watts
Lamp-Rear number
plate-RH (A127)
5.00 Watts
P
Sheet3
GN-OG,0.5,7115
C44N-8 C44M-8
BK,0.5,2495
C4LS04A-3
C4LS04A-2
BK-GY,0.5,335
S4D149B BK-GY,6.0,150
G4D149-1
Assembly-
Tail lamp-Left (A139)
Lamp-Reverse-
LH (A130)
16.00 Watts
Lamp-Side marker-
Rear-LH (A135)
5.00 Watts
Lamp-Tail-
LH (A115)
5.00 Watts
Lamp-Fog-
Rear-LH (A111)
21.00 Watts
LH stop
lamp (A125)
21.00 Watts
Turn signal indicator/
hazard flasher lamp-Rear-LH (A119)
21.00 Watts
AA
Sheet3
GN-WH,0.5,5835
C4LS35A-5
C4LS35A-4
BK-GY,1.5,375
S4D149A
BK-GY,2.5,220
R
Sheet3
GN-OG,0.75,6665
C4LS35A-1
AB
Sheet3
WH-OG,0.75,6785
C4LS35A-3
W
Sheet3
WH-GN,0.75,6665
C4LS35A-2
AC
Sheet3
GY-OG,0.75,6785
C4LS35A-6