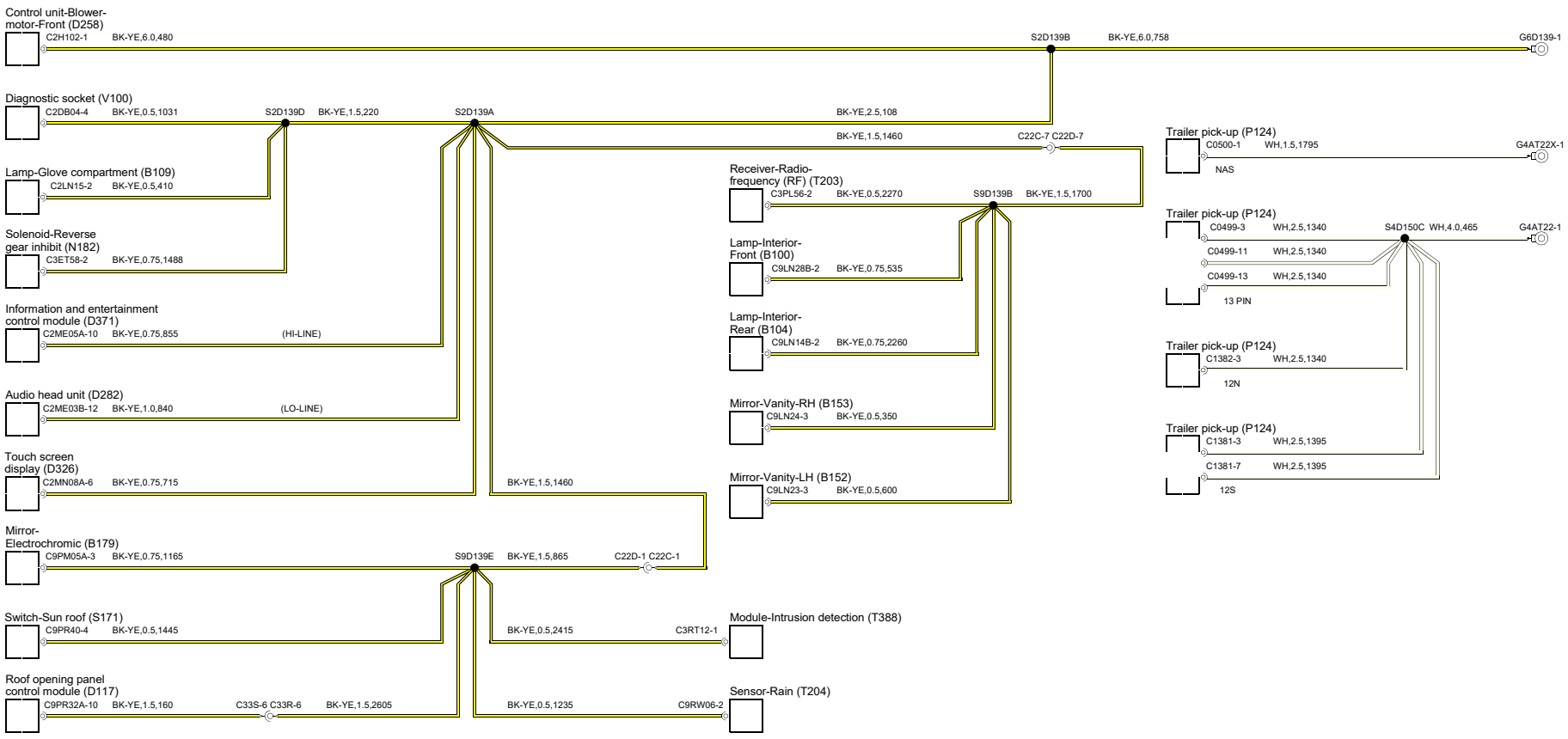
Control unit-Blower-motor-Front (D258)
C2H102-1
BK-YE,6.0,480
S2D139B
BK-YE,6.0,758
G6D139-1
Diagnostic socket (V100)
C2DB04-4
BK-YE,0.5,1031
S2D139D
BK-YE,1.5,220
S2D139A
BK-YE,2.5,108
BK-YE,1.5,1460
C22C-7 C22D-7
Lamp-Glove compartment (B109)
C2LN15-2
BK-YE,0.5,410
Solenoid-Reverse gear inhibit (N182)
C3ET58-2
BK-YE,0.75,1488
Information and entertainment control module (D371)
C2ME05A-10
BK-YE,0.75,855
(HI-LINE)
Audio head unit (D282)
C2ME03B-12
BK-YE,1.0,840
(LO-LINE)
Touch screen display (D326)
C2MN08A-6
BK-YE,0.75,715
BK-YE,1.5,1460
Mirror-Electrochromic (B179)
C9PM05A-3
BK-YE,0.75,1165
S9D139E
BK-YE,1.5,865
C22D-1 C22C-1
Switch-Sun roof (S171)
C9PR40-4
BK-YE,0.5,1445
BK-YE,0.5,2415
C3RT12-1
Roof opening panel control module (D117)
C9PR32A-10
BK-YE,1.5,160
C33S-6 C33R-6
BK-YE,1.5,2605
BK-YE,0.5,1235
C9RW06-2
Receiver-Radio-frequency (RF) (T203)
C3PL56-2
BK-YE,0.5,2270
S9D139B
BK-YE,1.5,1700
Lamp-Interior-Front (B100)
C9LN28B-2
BK-YE,0.75,535
Lamp-Interior-Rear (B104)
C9LN14B-2
BK-YE,0.75,2260
Mirror-Vanity-RH (B153)
C9LN24-3
BK-YE,0.5,350
Mirror-Vanity-LH (B152)
C9LN23-3
BK-YE,0.5,600
Module-Intrusion detection (T388)
Sensor-Rain (T204)
Trailer pick-up (P124)
C0500-1
WH,1.5,1795
G4AT22X-1
NAS
Trailer pick-up (P124)
C0499-3
WH,2.5,1340
S4D150C
WH,4.0,465
G4AT22-1
C0499-11
WH,2.5,1340
C0499-13
WH,2.5,1340
13 PIN
Trailer pick-up (P124)
C1382-3
WH,2.5,1340
12N
Trailer pick-up (P124)
C1381-3
WH,2.5,1395
C1381-7
WH,2.5,1395
12S